R6 Tiny Rocker Switches

Features

- Snap-in mounting
- Quick connect terminals

Specifications

- Rating 3A 125VAC, 2A 250VAC
  10A 125VAC, 6A 250VAC
  4(1)A 250VAC T85
- Mechanical Life ..... >10,000 Cycles
- Electrical Life ..... >10,000 Cycles
- Contact Resistance ..... <20mΩ (Initial)
- Insulation Resistance .... 1,000MΩ (DC 500V)
- Dielectric Strength ..... 1,500V AC
  ..... for 1 Minute
- Temperature Strength ... <80°C

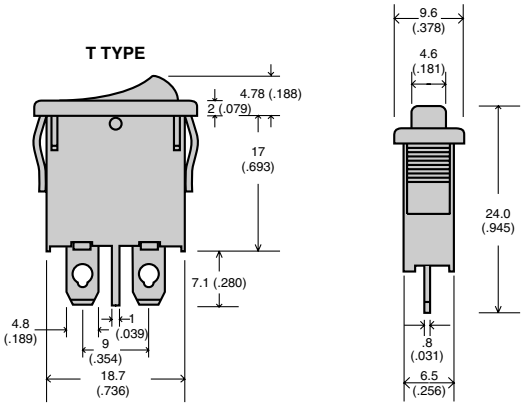

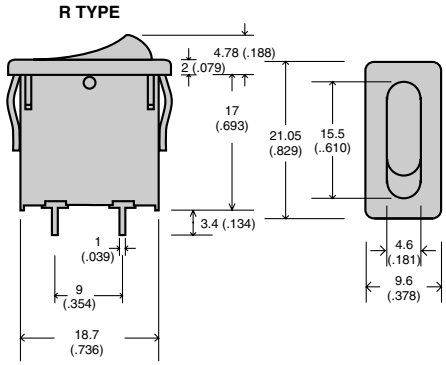

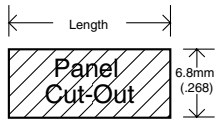

Contact us with
GEECO
Industrial Electronics & Controls
www.geeco.com
sales@geeco.com
(800) 354-3431
your order TODAY!

Panel Thickness (mm)	Length (mm)
0.7 ~ 1.25	19.2 + 0.2
1.25 ~ 2.0	19.4 + 0.2
2.0 ~ 3	19.6 + 0.2

Ordering Information:

R6 — [1] — [ ] — [ ] — [ ] — [ ] — [ ]

Function
1=SPST

Rating
0=2A 250V 3A 125V AC
2=6A 250V AC
10A 125V AC
4(1)A 250V AC T85

Housing Color
K=Black
W=White

Rocker Color
K=Black
W=White
G=Gray
O=Orange
R=Red

Marking
A =
E =
F =

Terminal Type
T Type
R Type